NOTE:
MATERIAL USAGE: 4"

WHEN USING PERFORATOR:
MAXIMUM NET FREE AREA =2.65 SQUARE INCHES
PER 12 INCHES OF PERFORATION
MAXIMUM OF TWO PERFORATIONS PER PANEL.

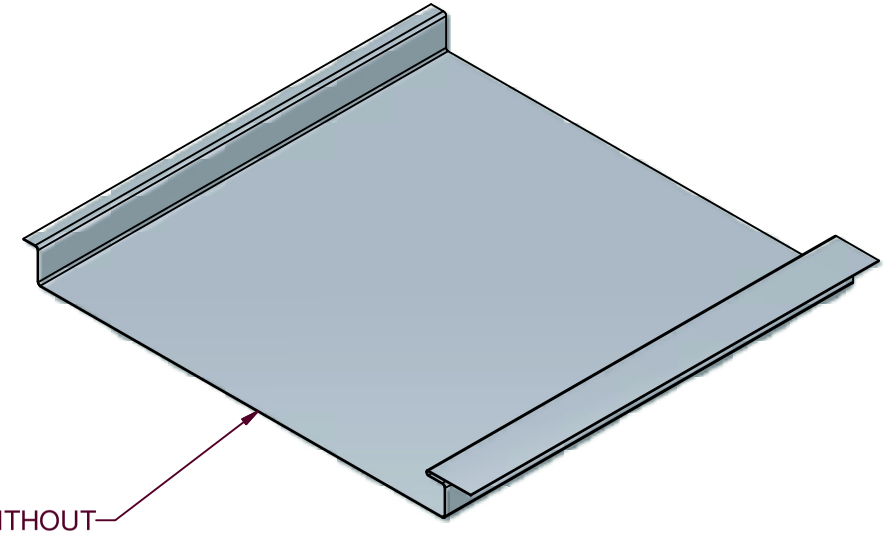

PANEL SHOWN WITHOUT
PERFORATIONS.

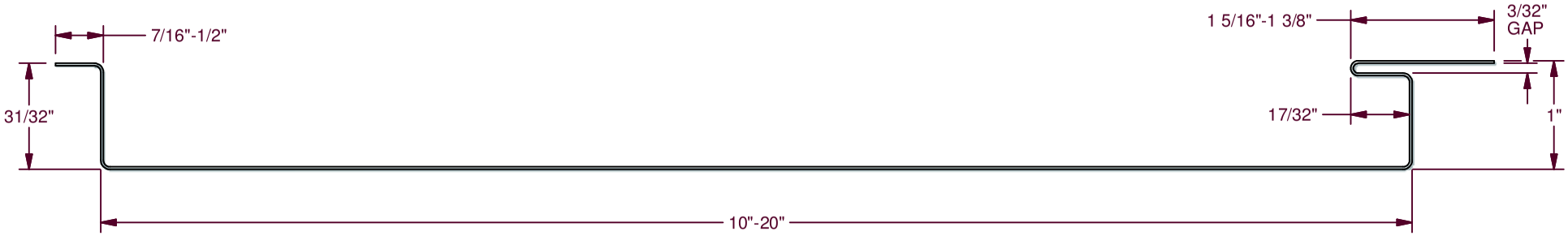

MATERIAL	FINISH

REVISION HISTORY	REV	ECR NO.	DATE	RELEASED BY

TOLERANCES
.XX = ± .01
.XXX = ± .005
FRACTION = ± 1/32"
ANGLE = ± 1/2°

DRAWN BY	JD
DATE	11/28/07
CHECK BY	FRY
DATE	11/29/07

PART NAME: FWM PANEL PROFILE

PART NUMBER: FW1-FWM

SHEET: 1 OF 1

REVISION: 0